PARTIAL-FILLED PIPE ELECTROMAGNETIC FLOW METER

NEW ARRIVAL

CE

Ex
C Q S T
NAN YANG

International Organization for Standardization
ISO
9001

New High-tech Enterprise

CE

Ex-proof

ISO

APPLICATION

Waste Water, Rainwater

Irrigation

Sewage

DETAILS

FLOW SENSOR

01 FLOW SENSOR

Suitable For
Low Flow Rate
Conductive Liquid

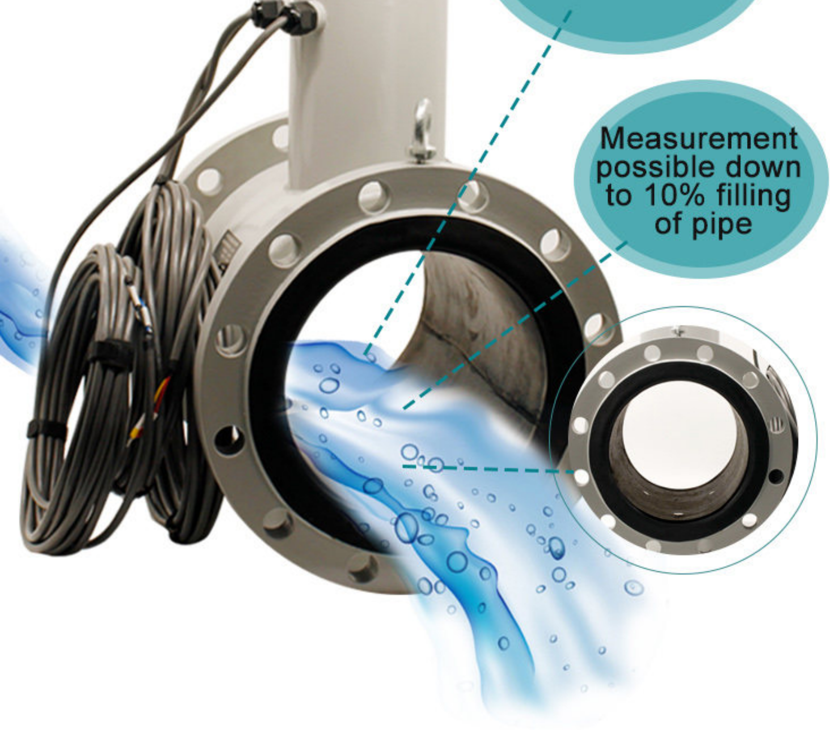

02 CONVERTER

FQ +00707.1 m3/h
L054.5% 0218mm
Σ+000000598 m3
FP 031.27 o/o

- Big Screen LCD Backlight Display
- Multiple Data Display
  Flow Rate,Water Level, Accumulated Flow, Flow Velocity etc
- Many varieties of units for options
- Multiple Signal Outputs

**Durable
Stable**

**Anti
Interference**

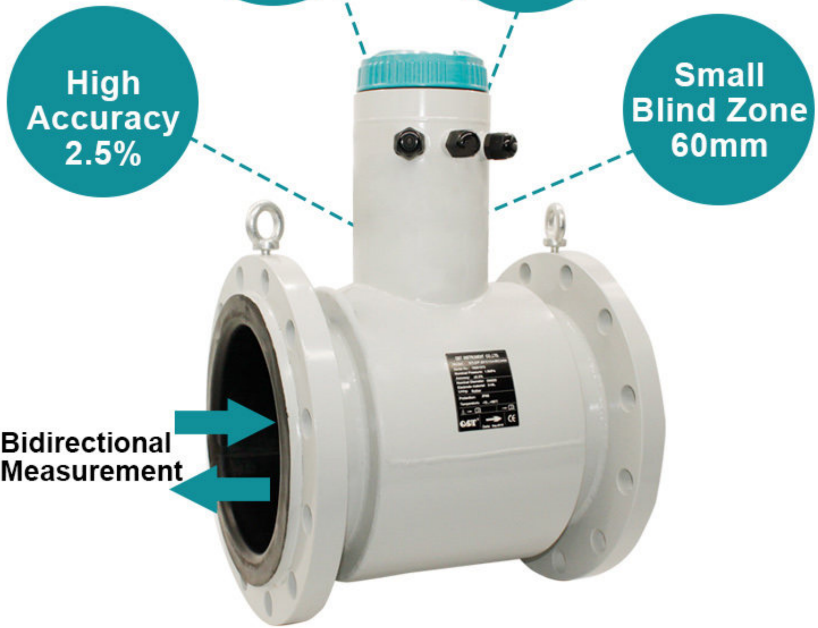

High Accuracy 2.5%

Small Blind Zone 60mm

Bidirectional Measurement

1. **No Pressure Lose**

2. **No Need To Close Pipe During Installation**

3. Continuous Measurement

Pipe Shape & Material

Can Measure Circle Tube, Square Tube, etc.

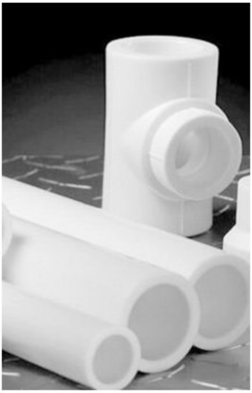

Apply To Cement, Carbon Steel, SS304 Pipe, etc

PARAMETER

Measuring Pipe Size	DN200-DN3000
Connection	Flange
Liner Material	Neoprene/Polyurethane
Electrode Material	SS316, TI, TA, HB, HC
Structure Type	Remote Type
Accuracy	2.5%
Output Signal	Modbus RTU, TTL electrical level
Communication	RS232/RS485
Flow speed range	0.05-10m/s
Protection Class	Converter: IP65 Flow Sensor: IP65 (standard) IP68(optional)

MODEL SELECTION

QTLD/F		XXX	X	X	X	X	X	X	X	X	X
Diameter (mm)	DN200-DN1000 three digit number										
Nominal pressure	0.6Mpa		A								
	1.0Mpa		B								
	1.6Mpa		C								
The connection method	The flange type			1							
Liner	neoprene				A						
Electrode materials	316L					A					
	Hastelloy B					B					
	Hastelloy C					C					
	titanium					D					
	tantalum					E					
	Stainless steel coated with tungsten carbide					F					
Structure form	Remote Type						1				
	Remote Type Diving type						2				
The power supply	220VAC 50Hz							E			
	24VDC							G			
	12V							F			
Output/ communication	Volume flow 4~20mADC/ pulse								A		
	Volume flow 4~20mADC/RS232C serial communication interface								B		
	Volume flow 4~20mADC/RS485C serial communication interface								C		
	Volume flow HART protocol output								D		
Converter form	square									A	
Special tag											

Diameter (mm)	Model number
200	201
250	251
300	301
350	351
400	401
450	451
500	501
600	601
700	701
800	801
900	901
1000	102

X	
1	The grounding electrode
2	Companion flange
3	Inlet protection flange

DIMENSION

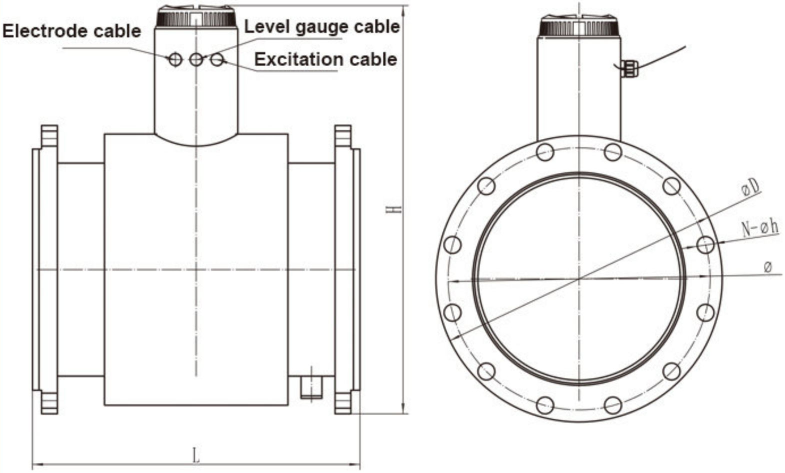

partial-filled pipe electromagnetic flow meter drawing(DIN flange)

Diameter (mm)	Nominal pressure	L(mm)	H	ØA	ØK	N-Øh
DN200	0.6	400	494	320	280	8-Ø18
DN250	0.6	450	561	375	335	12-Ø18
DN300	0.6	500	623	440	395	12-Ø22
DN350	0.6	550	671	490	445	12-Ø22
DN400	0.6	600	708	540	495	16-Ø22
DN450	0.6	600	778	595	550	16-Ø22
DN500	0.6	600	828	645	600	20-Ø22
DN600	0.6	600	934	755	705	20-Ø26
DN700	0.6	700	1041	860	810	24-Ø26
DN800	0.6	800	1149	975	920	24-Ø30
DN900	0.6	900	1249	1075	1020	24-Ø30
DN1000	0.6	1000	1359	1175	1120	28-Ø30

CALIBRATION

0.2% calibrate device ensure our high accuracy.
Calibrate each flow meter before delivery.
Each flow meter has its own calibrate certificate.

CERTIFICATE

Professional production, ensure high quality

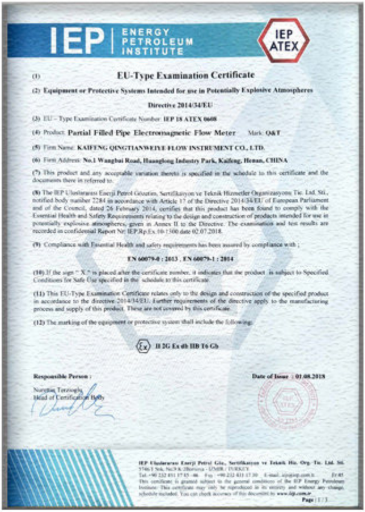

IEP | ENERGY PETROLEUM INSTITUTE

IEP ATEX

(1) **EU-Type Examination Certificate**

(2) **Equipment or Protective Systems Intended for use in Potentially Explosive Atmospheres**

Directive 2014/34/EU

(3) EU – Type Examination Certificate Number: **IEP 18 ATEX 0608**

(4) Product: **Partial Filled Pipe Electromagnetic Flow Meter** Mark: **Q&T**

(5) Firm Name: **KAIFENG QINGTIANWEIYE FLOW INSTRUMENT CO., LTD.**

(6) Firm Address: **No.1 Wangbai Road, Huanglong Industry Park, Kaifeng, Henan, CHINA**

(7) This product and any acceptable variation thereto is specified in the schedule to this certificate and the documents there in referred to.

(8) The IEP Uluslararası Enerji Petrol Gözetim, Sertifikasyon ve Teknik Hizmetler Organizasyonu Tic. Ltd. Sti., notified body number 2284 in accordance with Article 17 of the Directive 2014/34/EU of European Parliament and of the Council, dated 26 February 2014, certifies that this product has been found to comply with the Essential Health and Safety Requirements relating to the design and construction of products intended for use in potentially explosive atmospheres, given in Annex II to the Directive. The examination and test results are recorded in confidential Report Nr: IEP.Rp.Ex.10-1300 date 02.07.2018.

(9) Compliance with Essential Health and safety requirements has been assured by compliance with ;

EN 60079-0 : 2013 , EN 60079-1 : 2014

(10) If the sign " X " is placed after the certificate number, it indicates that the product is subject to Specified Conditions for Safe Use specified in the schedule to this certificate.

(11) This EU-Type Examination Certificate relates only to the design and construction of the specified product in accordance to the directive 2014/34/EU. Further requirements of the directive apply to the manufacturing process and supply of this product. These are not covered by this certificate.

(12) The marking of the equipment or protective system shall include the following:

Ⓔⓧ **II 2G Ex db IIB T6 Gb**

Responsible Person :

Nurettin Terzioglu
Head of Certification Body

Date of Issue : 01.08.2018

IEP Uluslararası Enerji Petrol Göz., Sertifikasyon ve Teknik Hiz. Org. Tic. Ltd. Şti.

This certificate is granted subject to the general conditions of the IEP Energy Petroleum Institute. This certificate may only be reproduced in its entirety and without any change, schedule included. You can check accuracy of this document in **www.iep.com.tr**

Page : 1 / 3

Partial Filled Pipe Electromagnetic Flow Meter Ex-proof

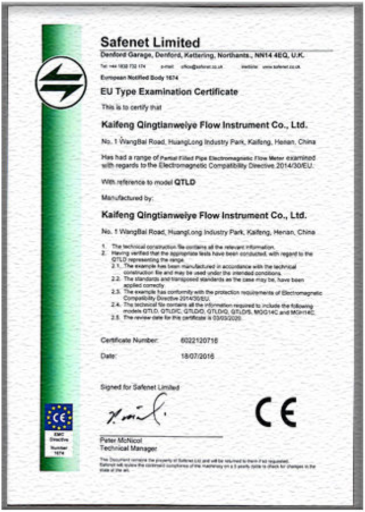

Safenet Limited

Denford Garage, Denford, Kettering, Northants., NN14 4EQ, U.K.

Tel +44 1832 732 174 e-mail office@safenet.co.uk website www.safenet.co.uk

European Notified Body 1674

EU Type Examination Certificate

This is to certify that

Kaifeng Qingtianweiye Flow Instrument Co., Ltd.

No. 1 WangBai Road, HuangLong Industry Park, Kaifeng, Henan, China

Has had a range of Partial Filled Pipe Electromagnetic Flow Meter examined with regards to the Electromagnetic Compatibility Directive 2014/30/EU.

With reference to model **QTLD**

Manufactured by:

Kaifeng Qingtianweiye Flow Instrument Co., Ltd.

No. 1 WangBai Road, HuangLong Industry Park, Kaifeng, Henan, China

1. The technical construction file contains all the relevant information.
2. Having verified that the appropriate tests have been conducted, with regard to the QTLD representing the range.
    2.1. The example has been manufactured in accordance with the technical construction file and may be used under the intended conditions.
    2.2. The standards and transposed standards as the case may be, have been applied correctly.
    2.3. The example has conformity with the protection requirements of Electromagnetic Compatibility Directive 2014/30/EU.
    2.4. The technical file contains all the information required to include the following models QTLD, QTLD/C, QTLD/D, QTLD/Q, QTLD/S, MQG14C and MGH14C.
    2.5. The review date for this certificate is 03/03/2020.

Certificate Number: 6022120716

Date: 18/07/2016

Signed for Safenet Limited

Peter McNicol
Technical Manager

CE

EMC Directive Number 1674

This Document remains the property of Safenet Ltd and will be returned to them if so requested. Safenet will review the continued compliance of the machinery on a 3 yearly cycle to check for changes in the state of the art.

Partial Filled Pipe Electromagnetic Flow Meter CE

德意志联邦共和国
商标注册证书
营业执照
企业法人营业执照

Enterprise Certificates

More than 100 patents

Packing Of Products

Products ready for packing

ECO Packing

Products are multi-packaging, shockproof and anti-fall, ensure the safe delivery of goods to customers' hand

Enter the finished product warehouse and wait for transportation

Enterprise style

PHILEMON
STCK
8

Trade Show

Rich experiences in exhibition